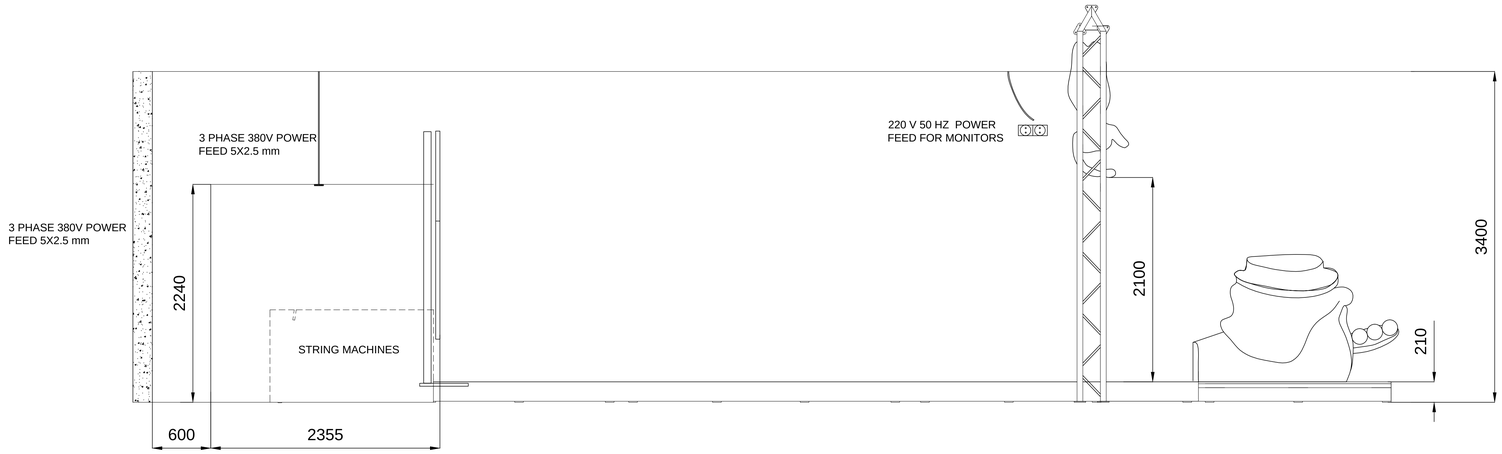

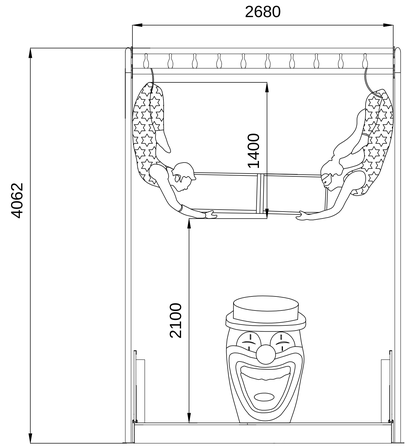

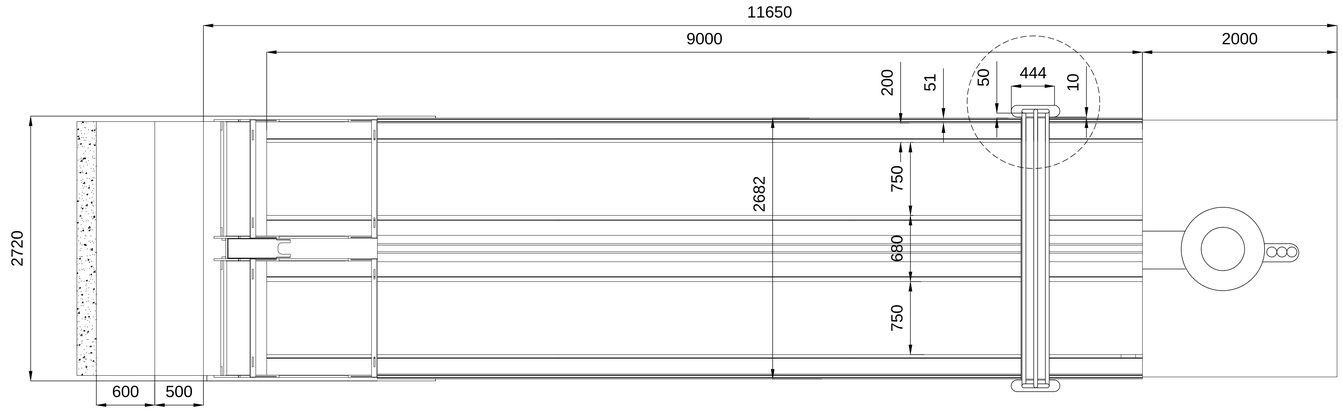

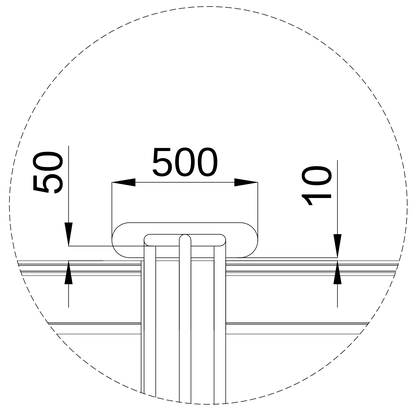

SWITCH®

SWITCH MINI BOWLING
CIRCUS THEME
MEASUREMENTS AND
POWER REQUIREMENTS